MONTGOMERY

XL - KC Model
EAT RITE HOG

DIMENSION SHEET
DS 24-7-90

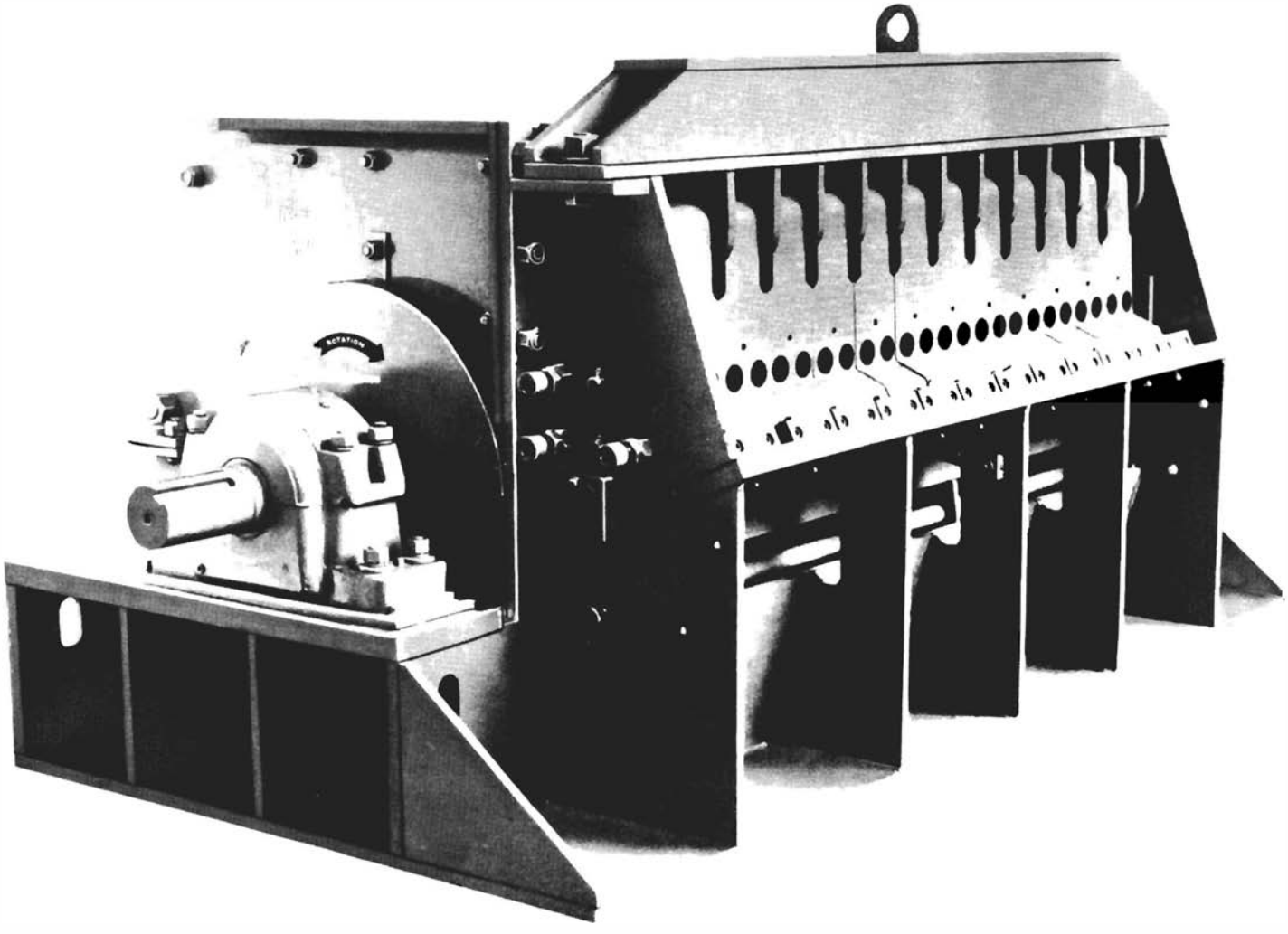

MONTGOMERY INDUSTRIES INTERNATIONAL, INC.

P.O. Box 3687 • 2017 Thelma St.
JACKSONVILLE, FLORIDA U.S.A. 32206
Phone (904) 355-5671 • FAX (904) 355-0401

Since 1925 - Solving Difficult Problems for Industry

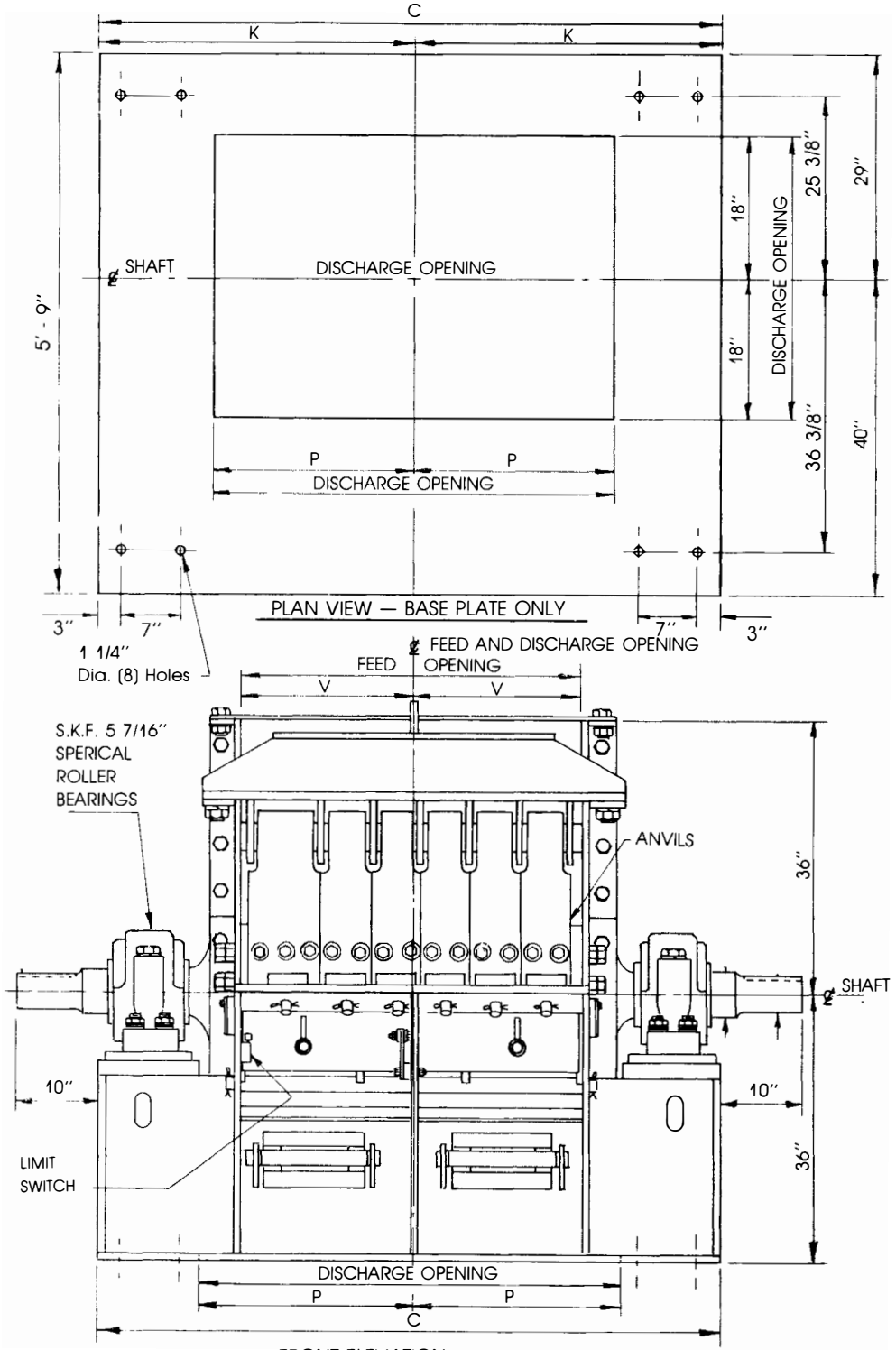

GENERAL NOTES

1. Do not feed against rotation. Feed may be any of other three directions.
2. Hog must be mounted with base horizontal. Do not mount Hog on an angle to facilitate feeding.
3. A reinforced concrete foundation should extend at least 6'' beyond Hog on all sides. The minimum thickness is 12''. Local codes and frost line will determine actual thickness required.
4. Upper hopper should be designed so that there is a minimum of 60'' from top of feed conveyor belt to companion flange on upper housing. Allow 36'' clearance all around machine for maintenance.
5. Feed Hopper opening ''F'' varies with application, but is normally either F = 35-3/8'' or F_1 = 24''.
6. All dimensions and weights shown are standard and may vary with special installations.
7. (12) - 1 3/4'' diameter holes for 1 1/2'' N.C. anchor bolts. Bolts extend to 3'' above minimum of 12'' reinforced concrete.
8. Motor can be mounted opposite end from that shown.
9. During normal operation there is very little impact or vibration load transmitted to the base of the machine. However, if Hog is to be mounted on steel columns, the supporting structure should be designed for two and one half times the static load for safety.

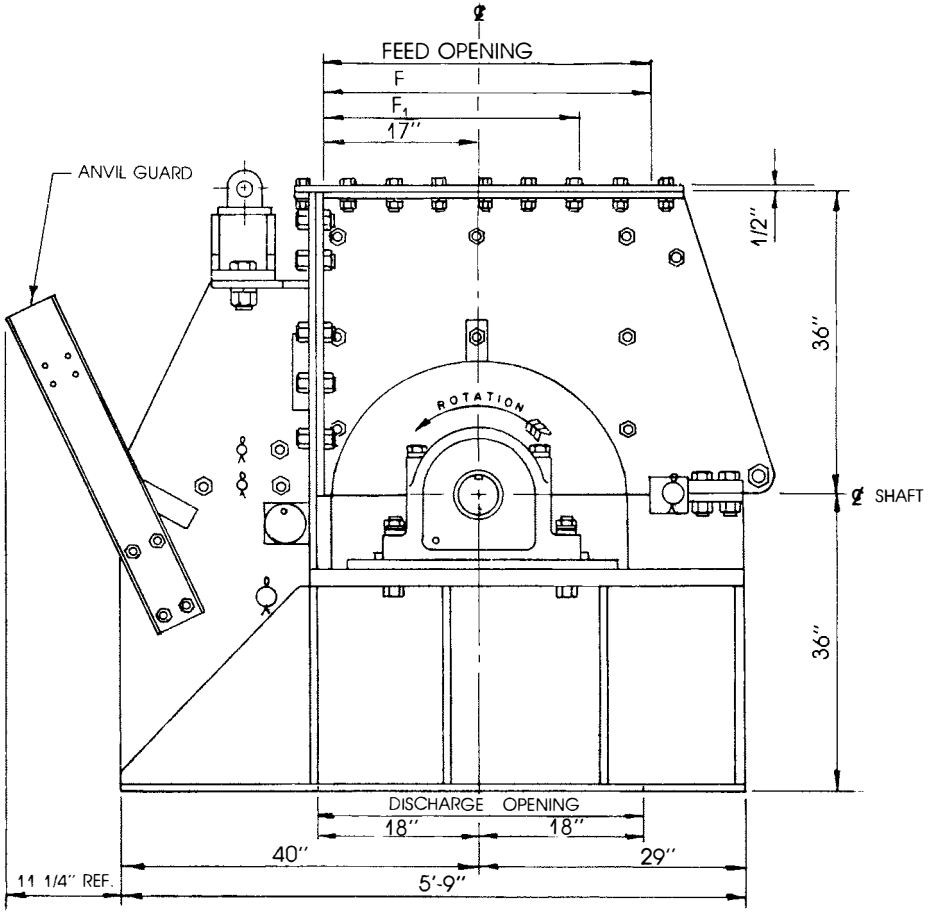

END ELEVATION

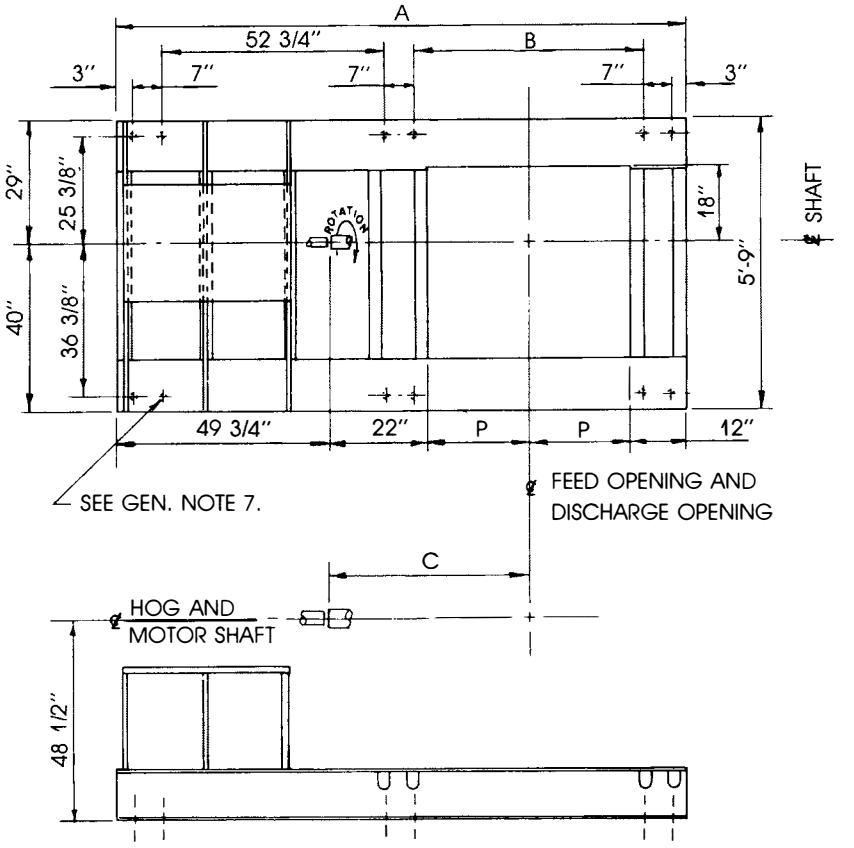

SUB - BASE

DIMENSIONS IN INCHES

MODEL	C	K	P	V	WR² # FT²	APPROX WEIGHT LBS.
21 XL-KC	57 3/4	28 7/8	16 7/8	10 3/4	3,955	15,800
27 XL-KC	63 3/4	31 7/8	19 7/8	13 3/4	4,980	18,000
33 XL-KC	69 3/4	34 7/8	22 7/8	16 3/4	6,005	20,200
39 XL-KC	75 3/4	37 7/8	25 7/8	19 3/4	7,030	22,400
45 XL-KC	81 3/4	40 7/8	28 7/8	22 3/4	8,055	24,600
51 XL-KC	87 3/4	43 7/8	31 7/8	25 3/4	9,080	26,800
57 XL-KC	93 3/4	46 7/8	34 7/8	28 3/4	10,105	29,000
63 XL-KC	99 3/4	49 7/8	37 7/8	31 3/4	11,130	31,200
69 XL-KC	105 3/4	52 7/8	40 7/8	34 3/4	12,155	33,400
75 XL-KC	111 3/4	55 7/8	43 7/8	37 3/4	13,180	35,600

SUB- BASE DIMENSIONS IN INCHES

MODEL	A	B	C	P	WT. - LB.
21 XL-KC	117 1/2	37 3/4	38 7/8	16 7/8	3,001
27 XL-KC	123 1/2	43 3/4	41 7/8	19 7/8	3,082
33 XL-KC	129 1/2	49 3/4	44 7/8	22 7/8	3,163
39 XL-KC	135 1/2	55 3/4	47 7/8	25 7/8	3,244
45 XL-KC	141 1/2	61 3/4	50 7/8	28 7/8	3,325
51 XL-KC	147 1/2	67 3/4	53 7/8	31 7/8	3,406
57 XL-KC	153 1/2	73 3/4	56 7/8	34 7/8	3,487
63 XL-KC	159 1/2	79 3/4	59 7/8	37 7/8	3,568
69 XL-KC	165 1/2	85 3/4	62 7/8	40 7/8	3,649
75 XL-KC	171 1/2	91 3/4	65 7/8	43 7/8	3,730

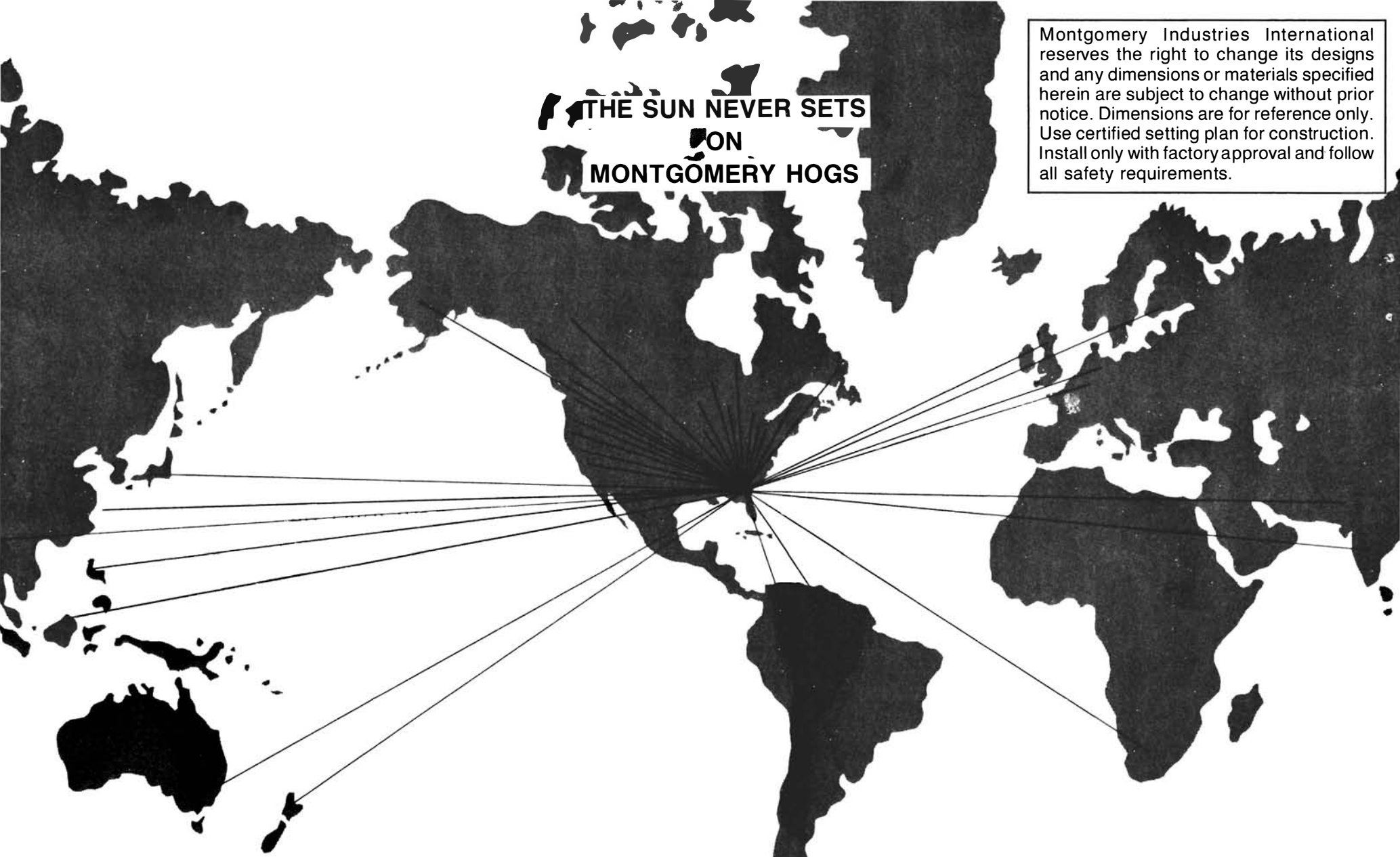

Montgomery Industries International reserves the right to change its designs and any dimensions or materials specified herein are subject to change without prior notice. Dimensions are for reference only. Use certified setting plan for construction. Install only with factory approval and follow all safety requirements.

INSTALLATIONS AROUND THE WORLD

• ARGENTINA • AUSTRALIA • BAHAMAS • BANGLADESH • BELGIUM • BRAZIL
• CANADA • CEYLON • CHILE • DUTCH GUIANA • ECUADOR • ENGLAND
• FORMOSA • FRANCE • GHANA • HONDURAS • HONG KONG • INDIA • JAPAN
• LIBERIA • MALAYSIA • MEXICO • NEW ZEALAND • PHILIPPINE ISLANDS
• POLAND • PUERTO RICO • REPUBLIC OF CHINA • RUSSIA • SCOTLAND • SOUTH AFRICA
• SWAZILAND • SWEDEN • UNITED STATES • VENEZUELA • WESTERN SAMOA • WEST INDIES

PRINTED IN U.S.A.

500d 11/90