MONTGOMERY

PM — KC MODEL
EAT — RITE HOG

DIMENSION SHEET
DS 24-5-97

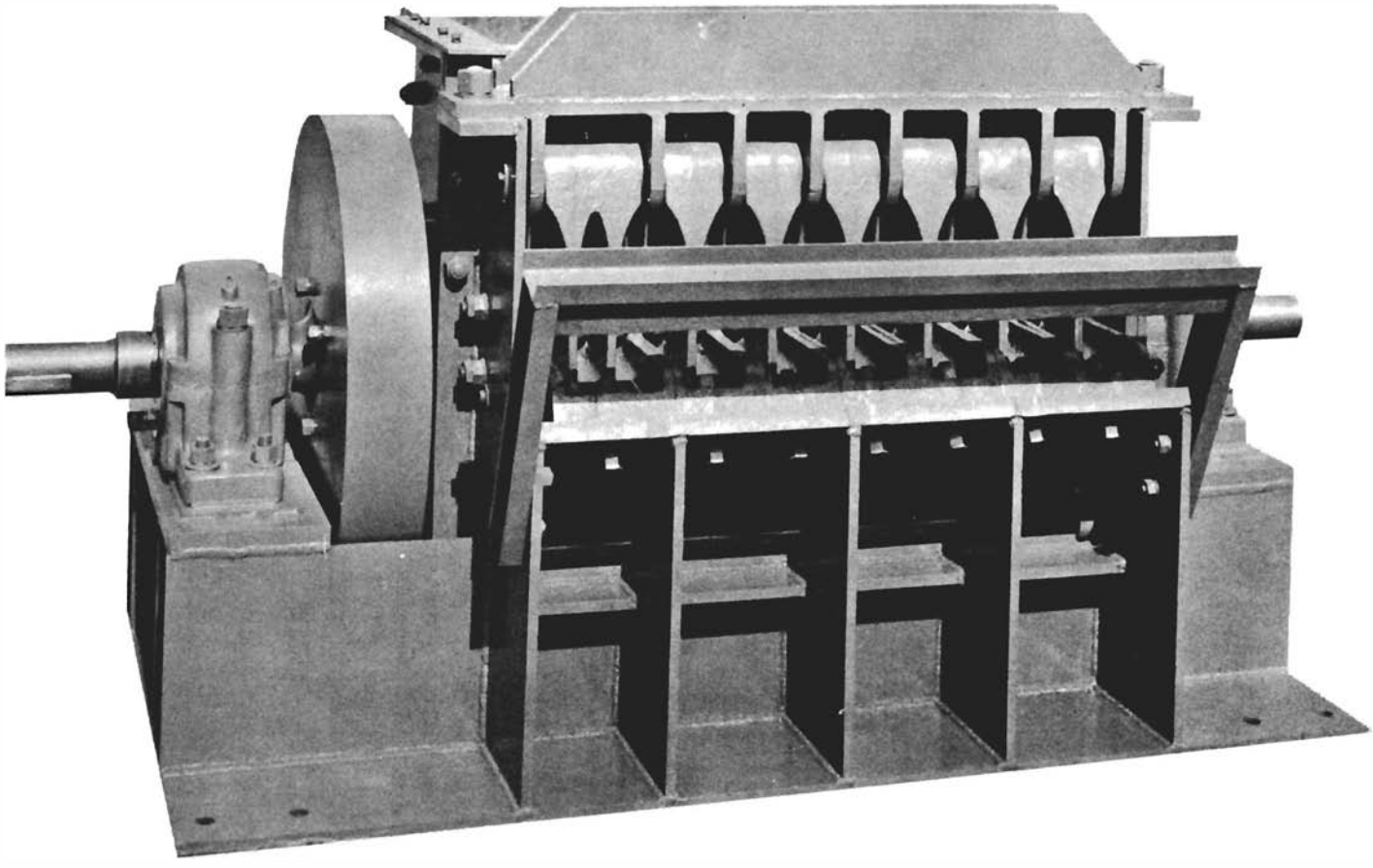

MONTGOMERY INDUSTRIES INTERNATIONAL, INC.

P.O. Box 3687 • 2017 Thelma St.
JACKSONVILLE, FLORIDA U.S.A. 32206
Phone (904) 355-5671 • FAX (904) 355-0401

Since 1925 - Solving Difficult Problems for Industry

DIMENSIONS
IN INCHES

MODEL	C	K	L	P	V	WR_2 #FT_2	APPROX. WEIGHT #
21 PM-KC	62½	34¾	27¾	15	10¾	2,421	9,700
27 "	68½	37¾	30¾	18	13¾	2,546	10,600
33 "	74½	40¾	33¾	21	16¾	2,671	11,500
39 "	80½	43¾	36¾	24	19¾	2,796	12,400
45 "	86½	46¾	39¾	27	22¾	2,921	13,300
51 "	92½	49¾	42¾	30	25¾	3,046	14,200
57 "	98½	52¾	45¾	33	28¾	3,171	15,100
63 "	104½	55¾	48¾	36	31¾	3,296	16,000
69 "	110½	58¾	51¾	39	34¾	3,421	16,900
75 "	116½	61¾	54¾	42	37¾	3,546	17,800

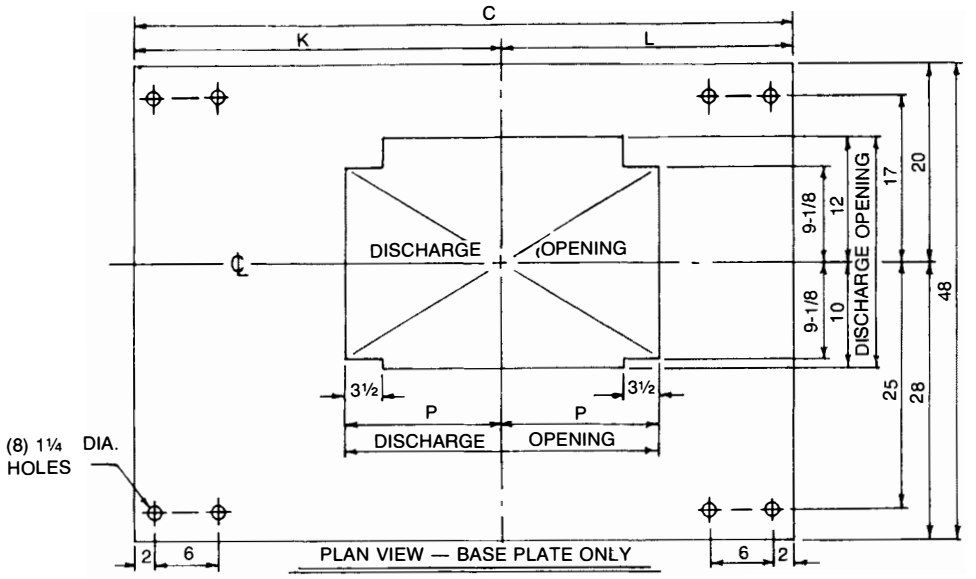

PLAN VIEW — BASE PLATE ONLY

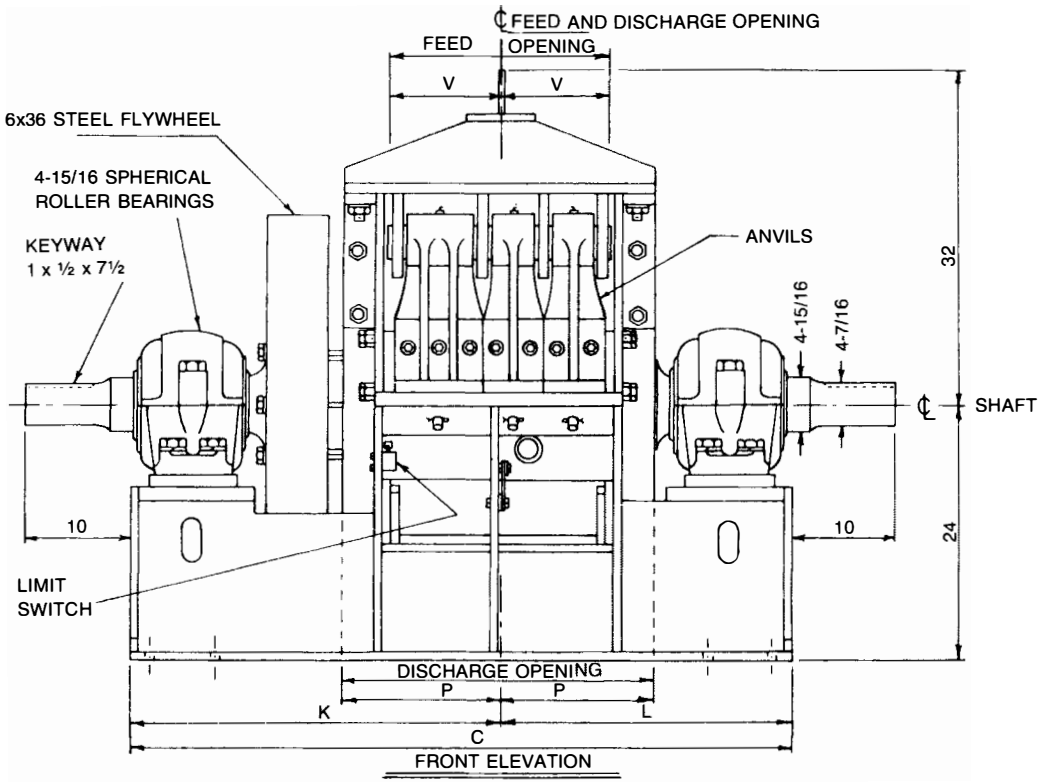

FRONT ELEVATION
(ANVIL GUARD REMOVED FOR CLARITY)

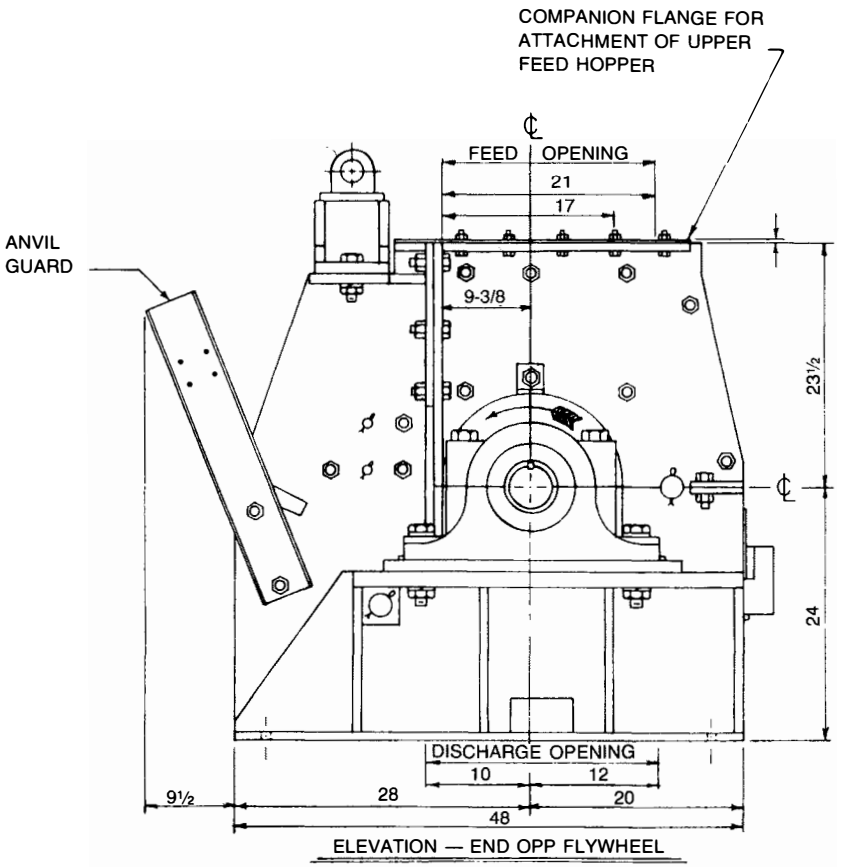

ELEVATION — END OPP FLYWHEEL

GENERAL NOTES

1. Do not feed against rotation. Feed may be any of other three directions.

2. Hog must be mounted with base horizontal. Do not mount Hog on an angle to facilitate feeding.

3. A reinforced concrete foundation should extend at least 6'' beyond Hog on all sides. The minimum thickness is 12''. Local codes and frost line will determine actual thickness required.

4. All dimensions shown are standard and may vary with special installations.

5. Flywheel on Hog can be built opposite end from that shown if requested before manufacturing is started.

6. Upper hopper should be designed so that there is a minimum of 60'' from top of feed conveyor belt to companion flange on upper housing. Allow 36'' clearance all around machine for maintenance.

SUB—BASE

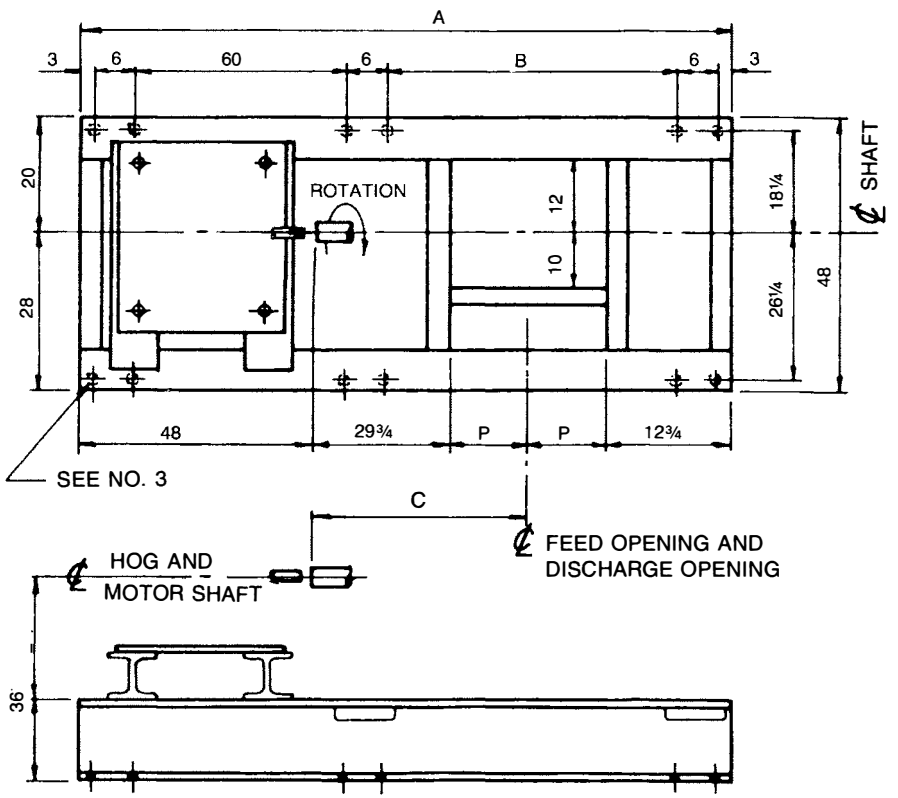

DIMENSIONS
IN INCHES

HOG SIZE	A	B	C	P	WT. #
21 PM-KC	120½	36½	44¾	15	1,691
27 " "	126½	42½	47¾	18	1,745
33 " "	132½	48½	50¾	21	1,799
39 " "	138½	54½	53¾	24	1,853
45 " "	144½	60½	56¾	27	1,907
51 " "	150½	66½	59¾	30	1,961
57 " "	156½	72½	62¾	33	2,015
63 " "	162½	78½	65¾	36	2,069
69 " "	168½	84½	68¾	39	2,123
75 " "	174½	90½	71¾	42	2,177

1. MOTOR CAN BE MOUNTED OPPOSITE END FROM THAT SHOWN IF REQUESTED BEFORE MANUFACTURING IS STARTED.

2. ALLOW A MINIMUM OF 3'-0'' CLEARANCE AROUND SUB-BASE FOR MAINTENANCE.

3. (12) 1¼'' DIA. HOLES FOR 1'' DIA. NC ANCHOR BOLTS. BOLTS TO EXTEND 3'' ABOVE A 12'' (MIN) THICK REINFORCED CONCRETE PAD.

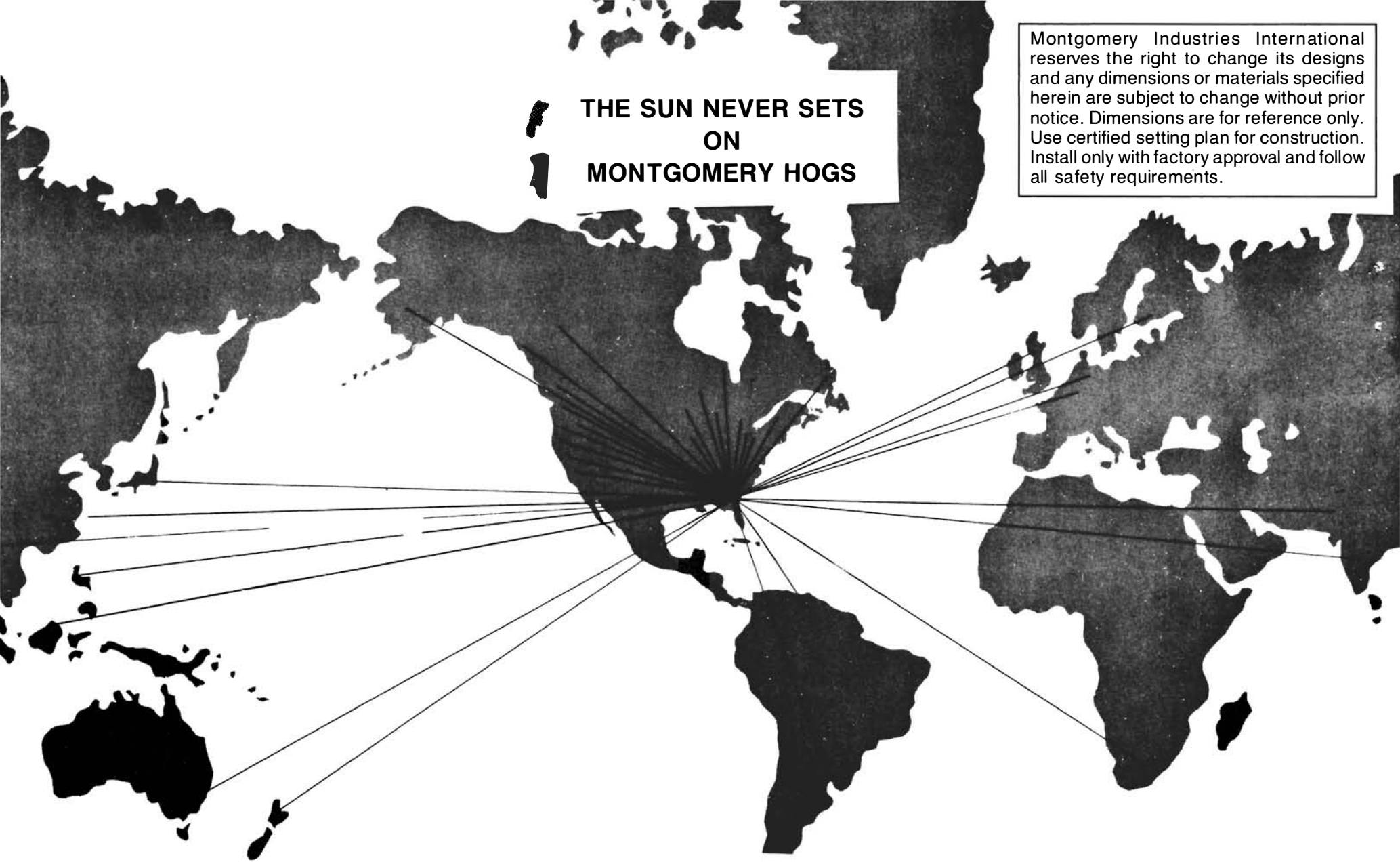

Montgomery Industries International reserves the right to change its designs and any dimensions or materials specified herein are subject to change without prior notice. Dimensions are for reference only. Use certified setting plan for construction. Install only with factory approval and follow all safety requirements.

INSTALLATIONS AROUND THE WORLD

• ARGENTINA • AUSTRALIA • BAHAMAS • BANGLADESH • BELGIUM • BRAZIL
• CANADA • CEYLON • CHILE • DUTCH GUIANA • ECUADOR • ENGLAND
• FORMOSA • FRANCE • GHANA • HONDURAS • HONG KONG • INDIA • JAPAN
• LIBERIA • MALAYSIA • MEXICO • NEW ZEALAND • PHILIPPINE ISLANDS
• POLAND • PUERTO RICO • REPUBLIC OF CHINA • RUSSIA • SCOTLAND • SOUTH AFRICA
• SWAZILAND • SWEDEN • UNITED STATES • VENEZUELA • WESTERN SAMOA • WEST INDIES

PRINTED IN U.S.A.

1-97-1000A